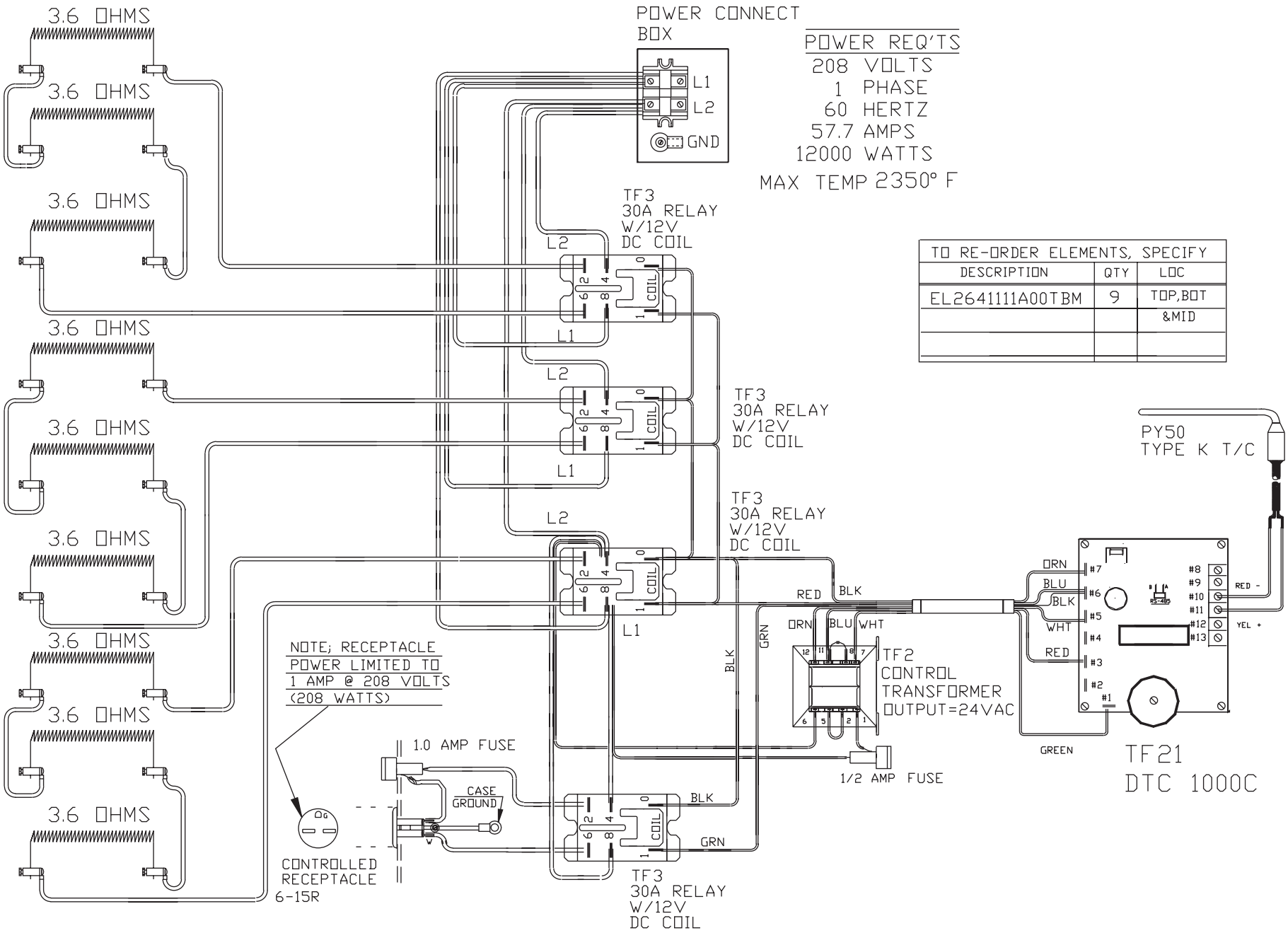

TO RE-ORDER ELEMENTS, SPECIFY		
DESCRIPTION	QTY	LOC
EL2641111A00TBM	9	TOP,BOT &MID

COMMENTS	PARAGON INDUSTRIES 2011 SOUTH TOWN EAST BLVD MESQUITE,TEXAS 75149	PRODUCT DESCRIPTION 28"DIA, 12 SIDES, 22.25"DP 208V, 1PH, 60HZ, 57.7A, 12000W	PART NO. 2641111A00	REV -
			WIRING DIAGRAM	

PARB1W.DWG WEBSITE DWG